OC13048

Measurement models of information service quality: A study on the banking sector

Noor Raihan Ab Hamid
UNITAR International University
Reda S Aburas
Tun Abdul Razak University

Abstract
Competition in the financial industry is intensified due to the globalization and the advancement in information technology. Today, the adoption of information systems has evolved from office automation to providing comprehensive information critical in decision making. By far, the quality of information service becomes one of the important factors in customers' assessment of service quality even before making purchase decisions. Likewise in the banking sector, customers' decision to subscribe to the banks services would depend on amongst, the information service quality (ISQ). This study aimed at identifying the measurement of ISQ based on customers' expectations. With the use of questionnaire survey customers' perceptions of quality of information service were identified. Questionnaires were randomly distributed to banks customers upon obtaining permission from the banks' branch managers. To meet the research objectives descriptive and causal analyses were applied. Structural equation modelling technique was applied to propose the measurement models of a four-construct ISQ. Theoretical and managerial implications were discussed. Finally this study presented some future directions of research.

Keywords: information technology, service quality, banking sector, Libya.

INTRODUCTION

The financial industry is witnessing fierce competition from major countries around the world that dominate the world's economy. Traditionally, competition was centered on the aspects of service quality which comprised of services rendered to the customers, for example at bank counters, types of products offered to the customers and so forth. However, with the evolvement of new technologies, information has become vital part of this rigorous competition, especially in the banking sector. One of the reasons why financial institutions place such great emphasis on information is because of the direct effect of the level of the quality of service provided that in turn enhances the profitability of the financial institution, Hanafi and Rasmih (2002) have reported that there is a link between information service quality provided and the profitability of the financial institution and its market share. Besides increasing the quality of information generated and provided to potential customers, information quality also has proven to reduce costs significantly in commercial banks.

INFORMATION SERVICES IN THE BANKING SECTOR

Defining Information Services

The American Association of Information systems defines the information system in general as an automated system to collect, organize, deliver and display information for use by individuals in the area of planning and monitoring of the activities carried out by organizations (Al-Bayati & Hilal, 1992; Tarek, 2000; Ajlouni, 1998; Pitt, Watson & Kavan, 1997). Further, Haddad and Gaoda (2003) and Al-Bayati and Hilal (1992) suggested that information system is also known as a system that provides the banking sector with the essential information for decision making at the appropriate time and suitable for the managerial level. Such a system will receive information, then save, process, and compile them, which will then be provided for its users at the right time and place.

Information Services in the Banking Sector

Indeed, the growth in communication channels in the banking sector renders information systems increased importance in providing information as a service, both vertically and horizontally within a company, and allowing for a mutual exchange between each other. Primarily, the presence of information in any banking sector is essential, but might not be adequate in solving all the problems faced by the banking sector unless the information put into a system is capable in providing the essential and necessary information at the right time and with the right value which will determine the quality and level of information services, be it good or poor (Husniyah & Salim, 2002; Ismail & Zeenat, 1995).

Consequently, information service quality (ISQ) has become a critical concern in today's financial institutions. Although recent studies of information systems indicate an increasing importance in understanding the attributes of information service quality, research is still limited. Recent research shows that ISQ measures are increasingly important for any information systems implementation. At the same time, literature indicates that trade-offs between various ISQ measures do exist. This study aimed at empirically identifying the ISQ measures and seeks to propose the measurement models of ISQ appropriate for the banking sector.

Measurement of Information Service Quality (ISQ)

Many studies have confirmed that ISQ is a multi-dimensional concept (Cappiello, Francalanci & Pernici, 2004; Redman, 1996; Wand & Wang, 1996; Wang & Strong, 1996; Huang et al., 1999). ISQ has been defined as fitness for use, in a way that data or information of high quality "meets or exceeds the users' requirements" (Wang & Strong, 1996). In addition, Shami (2009) defines ISQ as the provision of information at the level expected by customers while Al-Tuwairaki (1992) defines ISQ as meeting the needs and requirements of the customer from the first contact point. Further, Thompson et al. (1985) define ISQ as the provision of information at the right time to meet the needs and expectations of customers to coincide with the consensus that are consistent and coherent.

Wand and Wang (1996) have developed a set of lists of desirable information service quality measurement in an attempt to define information service quality. These measures include items such as accuracy, timeliness, reliability, consistency, importance, precision, understandability, usefulness and conciseness. In addition, Delone and McLean (1992) proposed an Information Systems Success Model which includes systems quality, information quality, user satisfaction and organizational impacts. On the other hand, Wang and Strong (1996) proposed a framework which was based on an extensive survey of the opinions of information service practitioners and resulted in the specification of four constructs of information service quality: intrinsic, access, contextual, and representational. These constructs were used to group the sixteen most important information service quality measures.

Overall, many researchers have pointed out various measures of the ISQ. Drawn upon measures reported by previous studies on information systems quality i.e Wang and Strong (1996) and Delone and McLean (1992) this study examined the appropriate measurement models for each constructs of the ISQ which are applicable to the banking sector. Figure 1 (Appendix) depicts the measures of the ISQ grouped by four constructs under study.

Access Construct

The first measure is Accessibility which refers to the extent to which information is quickly retrievable (Kahn et al., 2002). The second measure is Security which concerns appropriate restricted access to information (Kahn et al., 2002).

Intrinsic Construct

The information service quality is seen as being determined by the integral characteristics of information service. The essential characteristics which are considered as giving information have its degree of integrity (Keast et al., 2001). The measures associated with Intrinsic construct which comprises four elements: Believability, Accuracy, Objectivity and Reputation.

The first measure is Believability. It is the extent to which information is regarded as credible (Kahn et al., 2002). The second measure is Accuracy, which is defined as the degree of correctness pertaining to the content of the data (Davenport & Harris, 2007; McGilvray, 2008). Next, is Objectivity which refers to the extent of which information is unbiased, unprejudiced, and impartial (Kahn et al., 2002). The fourth measure is Reputation, which refers to information to be highly regarded in terms of its source or content (Kahn et al., 2002).

Representational Construct

The Representational construct of ISQ is represented by four measures: Conciseness, Understandability, Interpretability and Consistency. Conciseness involves information supplies is relevant to the information needs of the recipient. In addition, the information should be provided in the most compact form possible. This view is advocated by Delone and McLean (1992) and Wang and Strong (1996). The second measure is Understandability as proposed by Wang and Strong (1996) which is concerned about the data being clear, readable, unambiguous and easily comprehendible. Next is Consistency, which can be achieved if the representation of the information is the same in all cases. It involves continuous representation of information in the same format, compatible with previous information, and consistent in presentation (Cappiello et al., 2004; Wang & Strong, 1996). The fourth measure is interpretability and it relates to the extent to which information is disseminated in appropriate languages, symbols, and units with clear definitions (Kahn et al., 2002).

Contextual Construct

Contextual contruct highlights the requirement that information quality must be considered within the context of the task at hand; it must be relevant, complete, timely, and appropriate in terms of amount, so as to add value. The measures associated with Contextual ISQ include five items: Value-added, Timeliness, Relevancy, Amount of data and Completeness.

The first measure is Value-added, indicating the possibility of increasing some "value" (e.g., customer's satisfaction) by using information (Toms et al., 2005). Such information concerns the customers' needs which is also value adding because the fulfillment of the needs increases the customer's satisfaction. The value-added amount is calculated as the difference between the value that can be realized without using specific information and the value that can be realized with specific information.

The second measure is Timeliness, that is, the information should be available when needed. Providing of early information may deem to be no longer current when used. If the information is supplied too late, it will be of no use. Next is the Amount of data, which refers to the volume of information appropriate for the task at hand (Kahn et al., 2002). The fourth measure is Relevancy, that is, the information supplied should be relevant to a particular situation and should meet the information needs of the recipient. The final measure is Completeness. It concerns information provided should be able to match the information needs of the recipient. Incomplete information may compromise other attributes of information service quality, such as scope and accuracy.

SCOPE AND OBJECTIVES OF STUDY

This study focuses on North African Region, in particular Libya. The North African countries are similar in many aspects such as political, economical, and social. Most of them have the same problems inherited in from the banking sectors, but when compared to other North African countries, Libya s' financial capacity is much bigger. Yet the banking sector in Libya is still unable to compete aggressively in the global financial industry.

One of the factors that contribute to the growth of the banking sector is the increase in the number of customers within sector. Access to quality and efficient information services is important in order to gain customers' trust. This study seeks to provide better understanding on customers perceived quality of information services in the banking sector, in turn would assist managers in planning and improving the overall service quality.

RESEARCH METHOD

Questionnaire Design

Prior to testing this instrument for a pilot study, academic experts' opinions were sought to review the questions for validity purposes. Having made some changes to the draft, a pilot study was conducted on a smaller, yet representative sample than that of the intended sample of the study. The questions yielded high reliability indicating good internal consistency. Some respondents suggested rewording of some questions so as to avoid ambiguity. These comments were incorporated in the final questionnaire.

The questionnaire consisted of two sections: Section A consisted of questions assessing the respondents opinions on preferred information service quality provided by banks; Section B comprised of demographic information and the respondents' activities pertaining to banking in terms of frequency, years of experience, types of subscribed services and the degree of satisfaction. All items were measured on 5-point likert scales, ranging from 1 = strongly disagree to 5 = strongly agree.

Sampling and Data Collection

The target respondents in this study were the current customers from five major banks (Al-Sahara Bank /PNP Paribas Group, Al-Umma Bank, Al-Gumhouria Bank, Al-Wahda Bank and The National Commercial Bank) in Libya at the time the survey was conducted. To recognize and treat the sampling frame difficulty, the target population was defined as customers who had banking accounts.

To meet the research objectives, the data analysis techniques for this research were descriptive analysis, and causal analysis using Structural Equation Modeling (SEM). SEM is very sensitive to sample size and is less stable when estimating small samples (Tabachnick & Fidell, 2001). As a general rule of thumb, at least 300 cases were deemed comfortable, 500 as very good and 1000 as excellent (Comrey & Lee, 1992; Tabachnick & Fidell, 2007), thus it was decided to target a total of 1000 respondents from the five major banks mentioned above.

Letters seeking permission to distribute the questionnaire to the banks customers were sent out to the branches of the banks in major cities in Libya: Tripoli (North-East Libya), Benghazi, (North-West Libya) Al Jabal Garbi (South-west of Tripoli) and Al Jabal Al Akhdar, (South-East of Benghazi). A total of 30 branches were contacted out of which 23 were willing to cooperate. The rest did not respond or turned down the request.

Upon obtaining permission from the banks' branch managers, the data collection began with researchers randomly distributing the questionnaires to the banks customers. The self administered questionnaires were returned in a collection box once the customers have responded.

Data Analysis

Descriptive analysis was performed for easy interpretation of the data, such as frequency distribution and the mean. Next, correlation and factor analysis were conducted to determine the existence of inter-relationships between the variables and the clustering of data into identifiable components, which were steps to be taken before proceeding further with causal analysis. To understand the measurement that form customers' perceived quality of information service, causal analysis of Structural Equation Modeling (SEM) was conducted using the AMOS 20.0 software. Where ever applicable, AMOS even suggested how the

model may be improved to obtain a good-fit between the data and the model (Tabachnick & Fidell, 2003). Standardized betas were used to determine the strength and direction of the relationships in the model. SEM provided the cause-effect relationship between the research items as well as modeling the measurement of ISQ.

RESULTS

Respondent Profile

A total of 897 (89.7%) responses were collected, however only 850 (85%) responses were usable for analysis. Respondents were almost evenly split by gender (74.7% were male and 25.3% female). Most of the respondents were between 30-50 years of age (51.4%), followed by the age group of 21 to 30 at 17.8%. 56.3% of the respondents had spent at least 15 years in education. Most of the respondents worked in the private sector (75.2%) and more than half (60.7%) of them earn between US40,000 to USD80,000 per annum. As to the banking experience, 66.6% of the respondents had more than 11 years experience and about 65% of the respondent were not satisfied with the existing information service. Table 1 (Appendix) summarizes the respondent profile of this research.

Measurement Models of ISQ

Measurement Model of Access Construct

This section presents a uni-dimensional model of Access construct. Initially, the measurement model consisted of five observed variables. However, one item, AS1: "The information is readily available for investment decisions" had poor loadings and was dropped. The reliability level, standardized regression weights and goodness-of-fit statistics (RMSEA= 0.000, CFI= 1.00, TLI= 1.00 and GFI= 1.00) indicate that the four-indicator variables are good measures of the Access construct. As shown in Table 2 (Appendix), the standardized regression weights are all above the desired level at (≥0.50). Hence, this study suggests a four-item measurement model of Access construct (Item No. 5, 16, 17 and 18). Figure 2 (Appendix) depicts the proposed model.

Measurement Model of Intrinsic Construct

The results showed a very good fit of the data to the model. The internal reliability is very good indicating high internal reliability and consistency. In addition, the goodness-of-fit statistics: RMSEA= 0.023, CFI= 1.00, TLI= 0.99 and GFI= 0.99, indicate that the five-indicator variable model represents the Intrinsic construct well. Table 3 (Appendix) shows the summary of the statistics while Figure 3 (Appendix) displays the model.

Measurement Model of Representational Construct

Next, the results of the measurement model of Representational construct are discussed. Initially, the measurement model consisted of ten observed variables. However, due to extremely low factor loadings i.e less than 0.5, five items: RL12, RL20, RL25, RL27, and RL31were eliminated so as to reach a significant model as hypothesized. The reliability level, standardized regression weights and goodness-of-fit statistics indicate that the five-indicator variables are good measures of Representational construct as shown in Table 4 (Appendix). Figure 4 (Appendix) depicts the proposed measurement model.

Measurement Model of Contextual Construct

The uni-dimensional model of Contextual construct is presented in this section. Initially, the measurement model consisted of eleven observed variables. However, due to low factor loadings, five items CL11, CL15, CL23, CL30, and CL35 were eliminated in order to reach a significant model that fits well with the data. Having done omitting low loading items, the internal reliability was found to be very good, with the support of the convergent validity. The good-of-fit statistics of this model, as shown in Table 5 (Appendix) are reinforced by RMSEA= 0.000, CFI= 1.00, TLI= 1.00 and GFI= 0.99. Therefore, this study proposes a six-indicator model of Contextual construct as illustrated in Figure 5(Appendix).

DISCUSSION AND CONCLUSION

To be more competitive in the service industry, bank managers should comprehend the factors that are imperative in customers' overall assessment of service quality. One of the critical factors affecting perceived quality is the level of information services rendered to banks customers. Indeed, customers' decision to trust and be loyal to a banking service provider depends on the firm's credibility and reliability of safekeeping customers' financial information. Simultaneously, assurance of high security practices is imperative in increasing the level of confidence in the banks information service quality.

The findings from this study suggest that customers mostly prefer information to be easily understood and simple suffice for them to make decisions, particularly related to investments. In addition, information provided in relations to investment opportunities should be correct, up-to-date and appropriately sufficient to their needs.

Theoretically, this study has contributed to empirically identifying the measurement of information service quality (ISQ) and modelling the multiple-constructs of ISQ which the previous studies lacked. Next, as the research was carried out in Libya, this study has filled the gap in the literature which lacks findings from the North African region.

From the industry perspective, this study has reported the salient measurement of what constitutes quality information services as perceived by the customers. With a better understanding of customers expectation of ISQ banks managers may be able to strategize and adopt an incremental leap to enable them to function efficiently and effectively in view of competition in the global economy. Although the research was conducted in Libya other financial institutions in North Africa could benefit from the findings through the recognition of the importance of the quality of information services which will attract potential customers to patronage and subscribe to the banking services.

Similar research may be replicated in other North African countries such as Egypt, Algeria, and Middle East Countries such as Saudi Arabia, Yaman, Oman, Kuwait and Jordan since these countries have economic and cultural backgrounds that are similar to Libya. Further studies may examine how culture and diversity influence the perceptions of information service quality. Finally, it is suggested that for future studies, a qualitative approach such as interviews and focus group discussions may add more depth to the findings of the study.

The study was conducted in the banking sector. The findings may not reflect the overall situation in other sectors, such as the public sector in Libya. As such, further research should be conducted in other organizational cultures and business environments to determine the generalization of the findings.

References

Ajlouni, A. (1998) Assessment of Applications of information systems in the Jordanian banking sector. *Tishreen University Journal for Research and Scientific Studies-Economic and Legal Sciences Series, 31* (1)

Al-Bayati, E., & Hilal, A. (1992). *The entry to Management Information Systems in the banking sector*. Mosul: Department of Library.

Al-Tuwairaki, B. A. (1992). *The Principles of Effective Information Systems and Its Applications*. Tripoli: Libya publication.

Arbuckle, J. L. (2005) *Amos 6 User's Guide*. Chicago: SPSS Inc.

Becker, B. Huselid, M., & Ulrich, D. (2001). *The Human Resource Scorecard: Linking people,Strategy and Performance.* Harvard Business Press.

Brown, T. A. (2006), *Confirmatory Factor Analysis for Applied Research*, New York, NY: Guilford Press.

Byrne, B. M. (2001). *Structural Equation Modeling with AMOS: Basic Concepts, Applications and programming.* U.S.A.: Lawrence Erlbaum Associates, Inc.

Cappiello, C., Francalanci C. & Pernici, B. (2004). Time-Related Factors of Data Quality in Multichannel Information Systems. *Journal of Management Information Systems*, *20*(3), 71-91.

Comrey, A. L., & Lee, H. B. (1992). *A first course in factor analysis*. Hillsdale, New Jersey: Erlbaum.

Davenport, T. H., & Harris, J. G. (2007). The architecture of business intelligence. In Competing on analytics: Retrieved from http://www.accenture.com/NR/rdonlyres/15DCFF6A-4DE0-44D8-B778-630BE3A677A2/0/ArchBIAIMS.pdf

DeLone, W. H., & McLean, E. R. (1992). Information systems success: The quest for the dependent vari-able. *Information Systems Research, 3*(1), 60-95.

Haddad, D., & Gaoda, F. (2003). The impact of customers' dealing motivations with commercial banks on their loyalty: a field studies on clients of commercial banks in Jordan, Applied Science Private University Jordan. *Journal of Applied Sciences and Humanities*, *6* (2), 26-27.

Hair, J. F., Black, W.C., Babin, B., & Anderson, R.E. (2010). *Multivariate Data Analysis*. (7th Ed.). Prentice Hall, Upper Saddle River: New Jersey.

Hair, J. F., Rolph, E. Anderson, Ronald, L., Tatham, & William C.B. (2006). Multivariate Data Analysis, (6th Ed.). Upper Saddle River, NJ: Prentice Hall

Hanafi, A., & Rasmih, G. (2002). The Stock Markets and Financial Institutions. Al-Eskndria: University publication.

Huang, K. T., Lee Y. W., & Wang, R.Y. (1999). *Quality Information and Knowledge Management*. Prentice Hall, Upper Saddle River**.**

Hu, L.T., & Bentler, P.M. (1999). 'Cutoff criteria for fit indexes in covariance structure analysis:conventional criteria versus new alternatives', *Structural Equation Modeling, 6* (1),1-55.

Husniyah, M., & Salim, N. (2002). *Management Information Systems in the banking sector*, (1st Ed.). Amman: Wa'el publication.

Ismail, G., & Zeenat, M. M. (1995). *Accounting Information Systems in Financial Institutions*. Al-Eskandria: University Publication.

Kahn, B.K., Strong, D.M., & Wang, R.Y. (2002) 'Information quality benchmarks: product and service performance', *Communications of the ACM, 45* (4), 184–192.

Keast, G., Toms, E.G., & Cherry, J. (2001) 'Measuring the reputation of web sites: a preliminary exploration', *Joint Conference on Digital Libraries* (*JCDL'01*), 24–28 June 2001, Roanoke, Virginia, USA, pp.77–78.

Kline, R. B. (2005). *Principles and practice of structural equation modeling*, (2nd Ed). New York: Guilford Press

McGilvray, D.M. (2008). *Executing data quality projects: Ten steps to quality data and trusted information.* Burlington, MA: Morgan Kaufmann Publishers.

Pitt, L. F., Watson, R. T., & Kavan, C. B. (1997). Measuring information systems service quality: Concerns for a complete canvas. MIS Quarterly, 21(2), 209-221.

Redman, T. (1996). Data Quality for the Information Age. Artech House, Boston.

Shami, A.Y. (2009). The impact of qualitative characteristics of accounting information on the quality of financial reports issued by commercial banks working in Republic of Yemen, (Master, University of the Middle East, 2009). Retrieved from http://www.yemen-nic.info/contents/studies/detail.php?ID=21690

Tabachnick, B. G., & Fidell, L. S. (2001) *Using Multivariate Statistics*. (4th Ed). Boston: Allynand Bacon.

Tabachnick, B. G., & Fidell, L. S. (2007). *Using multivariate statistics.* (5th Ed.). Upper Saddle River, NJ: Pearson Allyn & Bacon

Tarek, T. (2000). Banks Management and Banking Information Systems. Cairo: Al-Kitab publication.

Thompson, P., DeSouza, G., & Gale, B. T. (1985). The strategic management of informatiom service quality// Quality progress, June, pp. 20–24.

Toms, E.G., O'Brien, H.L., Kopak, R., & Freund, L. (2005) 'Searching for relevance in the relevance of search, in Crestani, F. and Ruthven, I. (Eds.): *CoLIS 2005, LNCS 3507, pp.59–78.*

Wand, Y., & Wang R. Y. (1996). Anchoring Data Quality Dimensions in Ontological Foundations.*Communications of the ACM, 39*(11), 86-95.

Wang, R. Y., & Strong, D. M. (1996). Beyond Accuracy: What Data Quality Means to Data Consumers. Journal of Management Information Systems, 12(4), 5-34.

Appendix

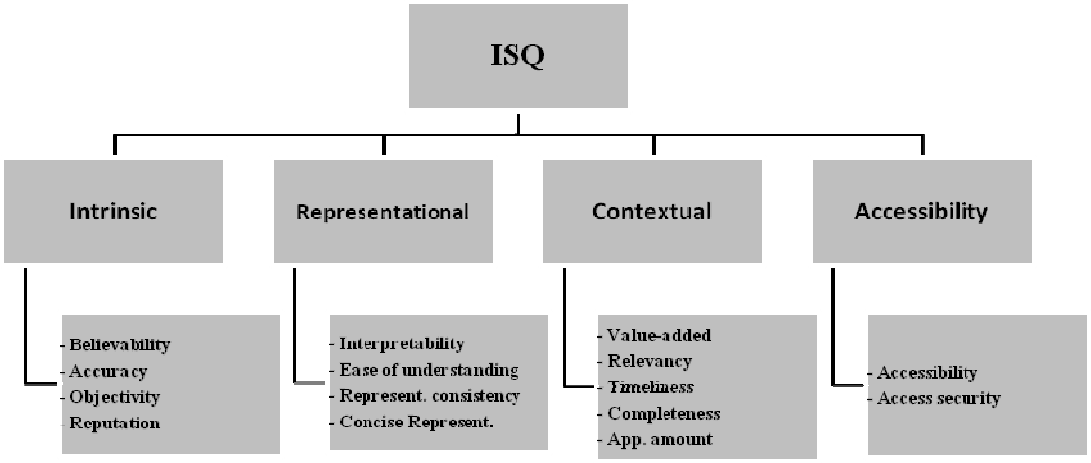

Figure 1: Measurement and Constructs and of Information Service Quality
(Adapted from: Wang and Strong (1996), and DeLone and McLean (1992))

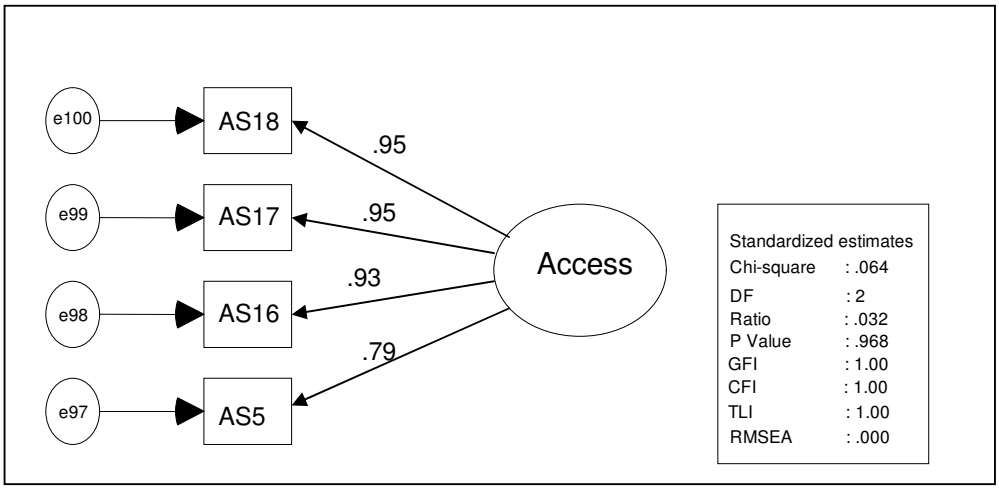

Figure 2: Measurement model of Access construct

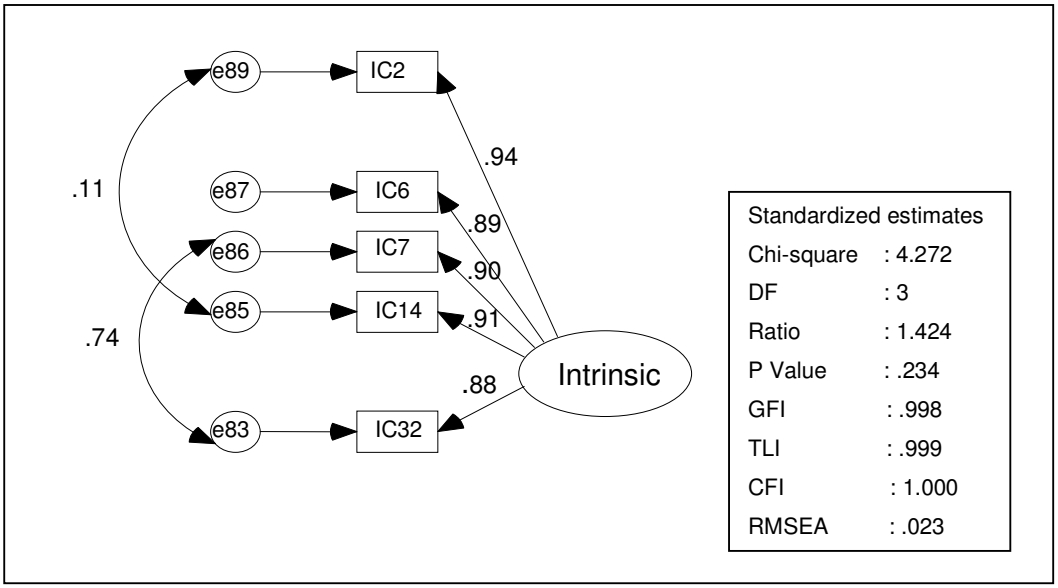

Figure 3: Measurement model of Intrinsic construct

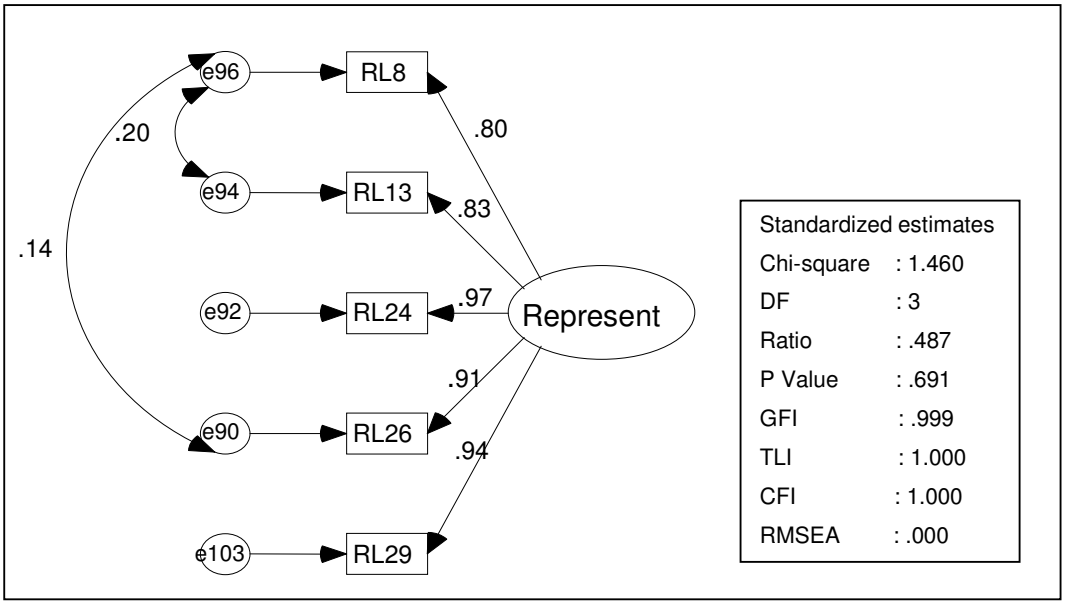

Figure 4: Measurement model of Representational construct

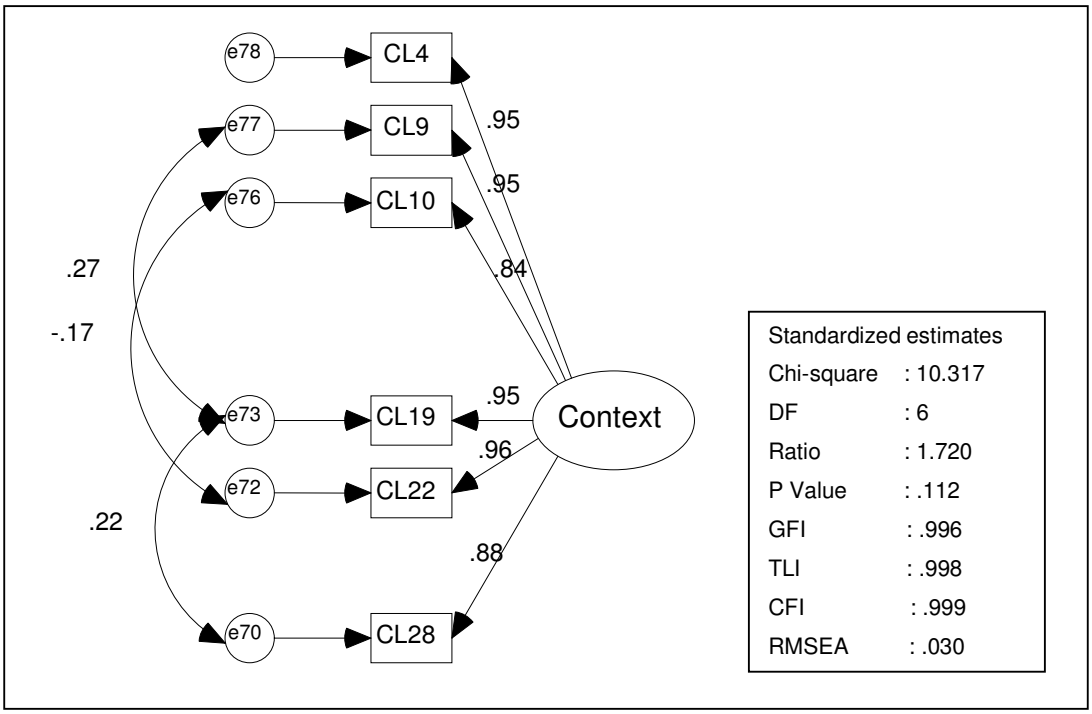

Figure 5: Measurement model of Contextual construct

Table 1: Summary of respondent profile

1. Gender			**4. Occupation**		
- Male	635	74.7	- Public sector	2 1 1	24.8
- Female	215	25.3	- Private sector	6 3 9	75.2
2. Age			**5. Annual income**		
- Below 20 years	28	3.3	- less than DL20,000	95	11.2
- 21-30 years	151	17.8	- DL20,000– DL50,000	239	28.1
- 31-40 years	250	29.4	- DL51,000-DL100,000	346	40.7
- 41-50 years	296	34.8	- More than DL100,000	170	20.0
- Above 50 years	125	14.7	**6. Marital Status**		
3. Education			- Single	359	42.2
- Primary	52	6.1	- Married	491	57.8
- Secondary	107	12.6	**7. Location**		
- Diploma	204	24.0	- Tripoli	360	42.4
- Degree	320	37.6	- Benghazi	190	22.4
- Masters	136	16.0	- Al Jabal Garbi	166	19.5
- PhD	23	2.7	- Al Jabal Al Akhdar	134	15.8
- Others	8	.9			

Table 2: Goodness-of-fit Statistics for the Measurement Model of Accessibility

Standardised Regression Weight	Estimate	Goodness-of-fit measures	
AS 5 ← ACCESS	0.79	[a]Root mean error of est.(RMSEA)	0.000
AS 16 ← ACCESS	0.93	[b] Goodness-of-fit index(GFI)	1.00
AS 17 ← ACCESS	0.95	[c]Tucker-Lewis index(TLI)	1.00
AS 18 ← ACCESS	0.95	[d]Comparative Fit index(CFI)	1.00

Keys:

ACCESS - Accessibility and Security

AS5 - The information about the company's stock market is quickly retrievable

AS16 - The bank has a secured database that provides high restriction on data to maintain its security

AS17- Data are treated with high confidentially

AS18 - Data are safeguarded with high security

Recommended value: [a]≤0.06 (Byrne,2001; Kline, 2005; Brown,2006); [b] > 0.95 good fit (Kline 2005; Hair et al., 2006; Byrne, 2001; Arbuckle, 2005); [c,d]>0.95 good fit, Close to 1.0 perfect fit (Hu & Bentler 1999)

Table 3: Goodness-of-fit Statistics for the Measurement Model of Intrinsic

Standardised Regression Weight	Estimate	Goodness-of-fit measures	
IC2 ← INTRINSIC	0.94	[a]Root mean error of est.(RMSEA)	0.023
IC6 ← INTRINSIC	0.89	[b]Goodness -of-fit index(GFI)	0.99
IC7 ← INTRINSIC	0.90	[c]Tucker -Lewis index(TLI)	0.99
IC14 ← INTRINSIC	0.91	[d]Comparative Fit index(CFI)	1.00
IC32 ← INTRINSIC	0.88		

Keys:

INTRINSIC - Accessibility and Security

IC2 - The information is reliable

IC6 - The information provided by the bank is correct

IC7 - The information provided is regarded as credible.

IC14- The content of the data is unbiased.

IC32 - Information provided by the bank is characterized by a high degree of credible

Recommended value: [a]≤0.06 (Byrne,2001; Kline, 2005; Brown,2006); [b] > 0.95 good fit (Kline 2005; Hair et al., 2006; Byrne, 2001; Arbuckle, 2005); [c,d]>0.95 good fit, Close to 1.0 perfect fit (Hu & Bentler 1999)

Table 4: Goodness-of-fit Statistics for the Measurement Model of Representational

Standardised Regression Weight	Estimate	Goodness-of-fit measures	
RL8 ← REPRESENT	0.80	[a]Root mean error of est.(RMSEA)	0.00
RL13 ← REPRESENT	0.83	[b]Goodness -of-fit index(GFI)	0.99
RL24 ← REPRESENT	0.97	[c]Tucker-Lewis index(TLI)	1.00
RL26 ← REPRESENT	0.91	[d]Comparative Fit index(CFI)	1.00
RL29 ← REPRESENT	0.94		

Keys:

REPRESENTATIONAL -

RL8 - Summarized information which is easily comprehended is preferred.

RL13 - The information provided can be easily understood.

RL24-The information is provided by the bank is easy to interpret what this information means.

RL26 - The meaning of information provided by the bank is easy to understand.

RL29 - The information is presented in a compact form.

Recommended value: [a]≤0.06 (Byrne,2001; Kline, 2005; Brown,2006); [b] > 0.95 good fit (Kline 2005; Hair et al., 2006; Byrne, 2001; Arbuckle, 2005); [c,d]>0.95 good fit, Close to 1.0 perfect fit (Hu & Bentler 1999)

Table 5: Goodness-of-fit Statistics for the Measurement Model of Contextual

Standardised Regression Weight			Estimate	Goodness-of-fit measures	
CL4	←	CONTEXTUAL	0.95	[a]Root mean error of est.(RMSEA)	0.030
CL9	←	CONTEXTUAL	0.95	[b]Goodness-of-fit index(GFI)	0.99
CL10	←	CONTEXTUAL	0.84	[c]Tucker-Lewis index(TLI)	0.99
CL19	←	CONTEXTUAL	0.95	[d]Comparative Fit index(CFI)	0.99
CL22	←	CONTEXTUAL	0.96		
CL28	←	CONTEXTUAL	0.88		

Keys:

CONTEXTUAL -

CL4 - The information provided consists of appropriate amounts of data required for the investment decision.

CL9 - The information available to clients is complete.

CL10 - The information that is available to clients is sufficient for the investment decision

CL19 - The information provided is up-to-date.

CL22 - The information provided has added- value advantage

CL28 - The information provided by the bank is sufficiently timely

Recommended value: [a]≤0.08 (Byrne, 2001; Kline, 2005; Brown, 2006); [b] > 0.95 good fit (Kline 2005; Hair et al., 2010; Byrne, 2001; Arbuckle, 2005); [c,d]>0.95 good fit (Hu & Bentler 1999; Hair et al., 2006).